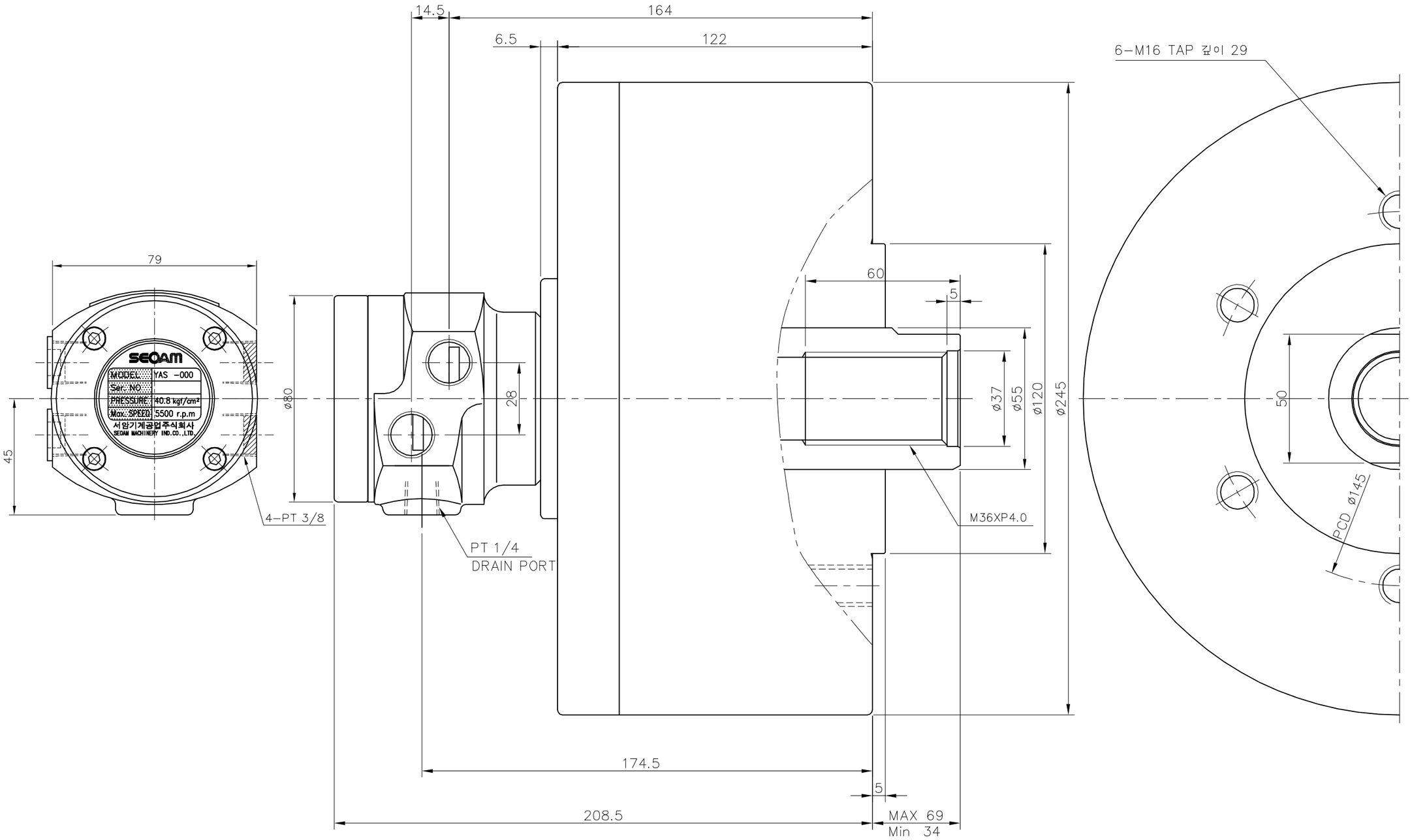

SPECIFICATIONS		
CHUCK TYPE	YAS -200	
CYLINDER DIA	205 mm	
PISTON STROKE	35 mm	
PISTON AREA	EXTEND 330 cm^2	RETRACT 306 cm^2
MAX. DRAW BAR PULL	EXTEND 12,408 Kgf	RETRACT 11,505 Kgf
MAX. OPERATING PRESSURE	4.0 MPa (40.8 Kg_f/cm^2)	
MIN. OPERATING PRESSURE	0.5 MPa (5 Kg_f/cm^2)	
MAX.PERMISSIBLE SPEED	5500 rpm	
WEIGHT	Kg	
MOMENT OF INERTIA(GD^2)	Kg .m ^{2}	
TATAL LEAKAGE	1.0 L/min	
(1 KN = 100 kgf , 1 MPa = 10 kgf/cm ²)		

SCALE	PROJECTION	ITEM NO.	YAS-200
1:1		PART NAME	CLOSED HYDRAULIC CYLINDER
SEOAM 서암기계공업주식회사 SEOAM MACHINERY INDUSTRY CO.,LTD.		PART NO.	2AS20