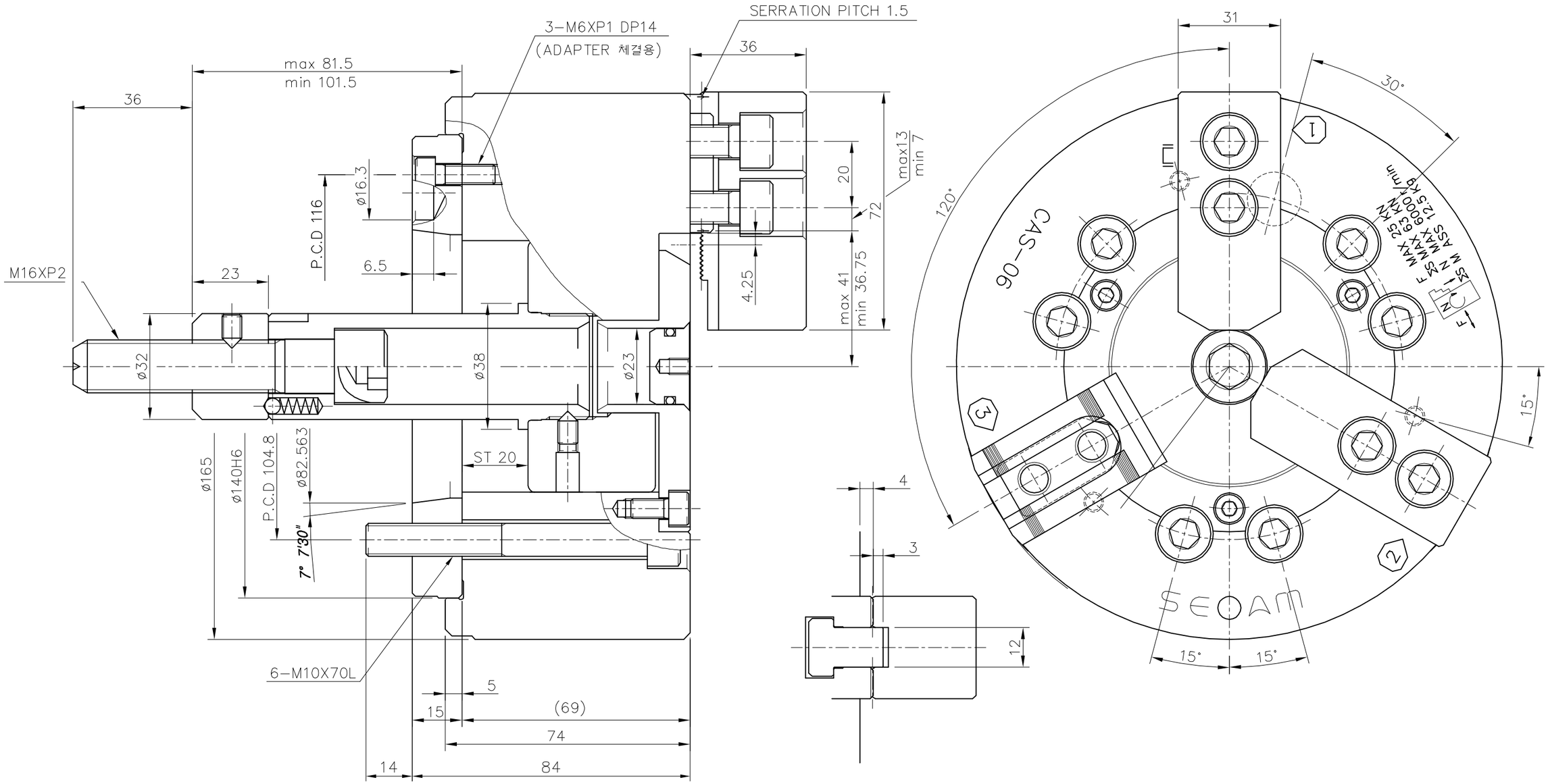

SPECIFICATIONS			
CHUCK TYPE	CASA-06		
CYLINDER TYPE	YAS-100		
PISTON STROKE	20	mm	
JAW STROKE (DIA.)	MAX.	9.2	mm
	상용		mm
MAX. OPERATING PRESSURE	MAX.	28	Kgf/cm²
	상용		Kgf/cm²
MAX. DRAW BAR PULL	1,938(19KN)	Kg.f	
CLAMPING FORCE (실린더력 2,550일때)	5,508(54KN)	Kg.f	
MAX. R.P.M	5,300	r.p.m.	
WEIGHT	13	Kg	
GD²	0.045	Kg.m²	

SCALE	PROJECTION	ITEM NO.	CASA-06
1:1		PART NAME	CLOSED CENTER POWER CHUCK ASS'Y
SEOAM 서암기계공업주식회사 SEOAM MACHINERY INDUSTRY CO.,LTD.		PART NO.	1ASA06