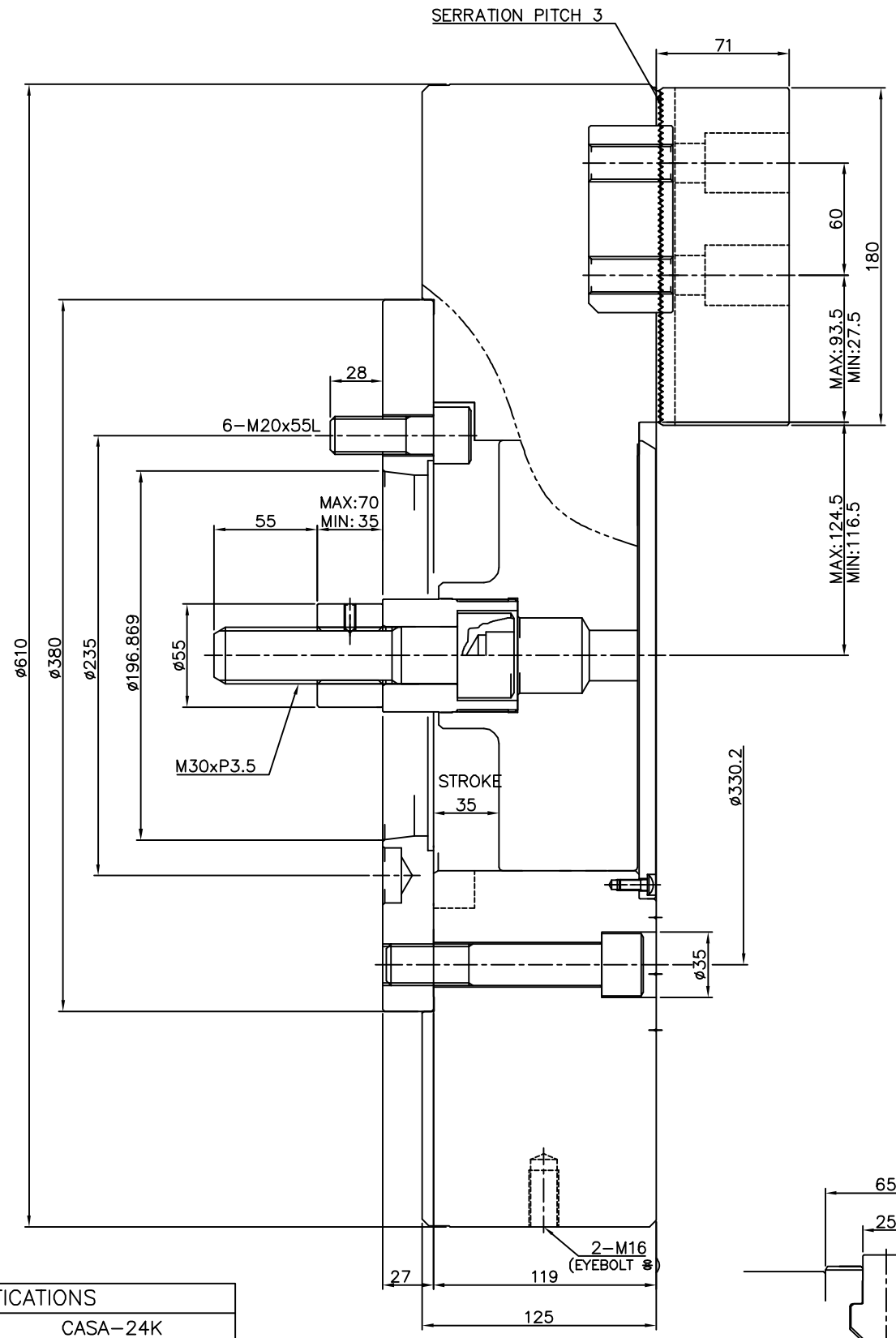

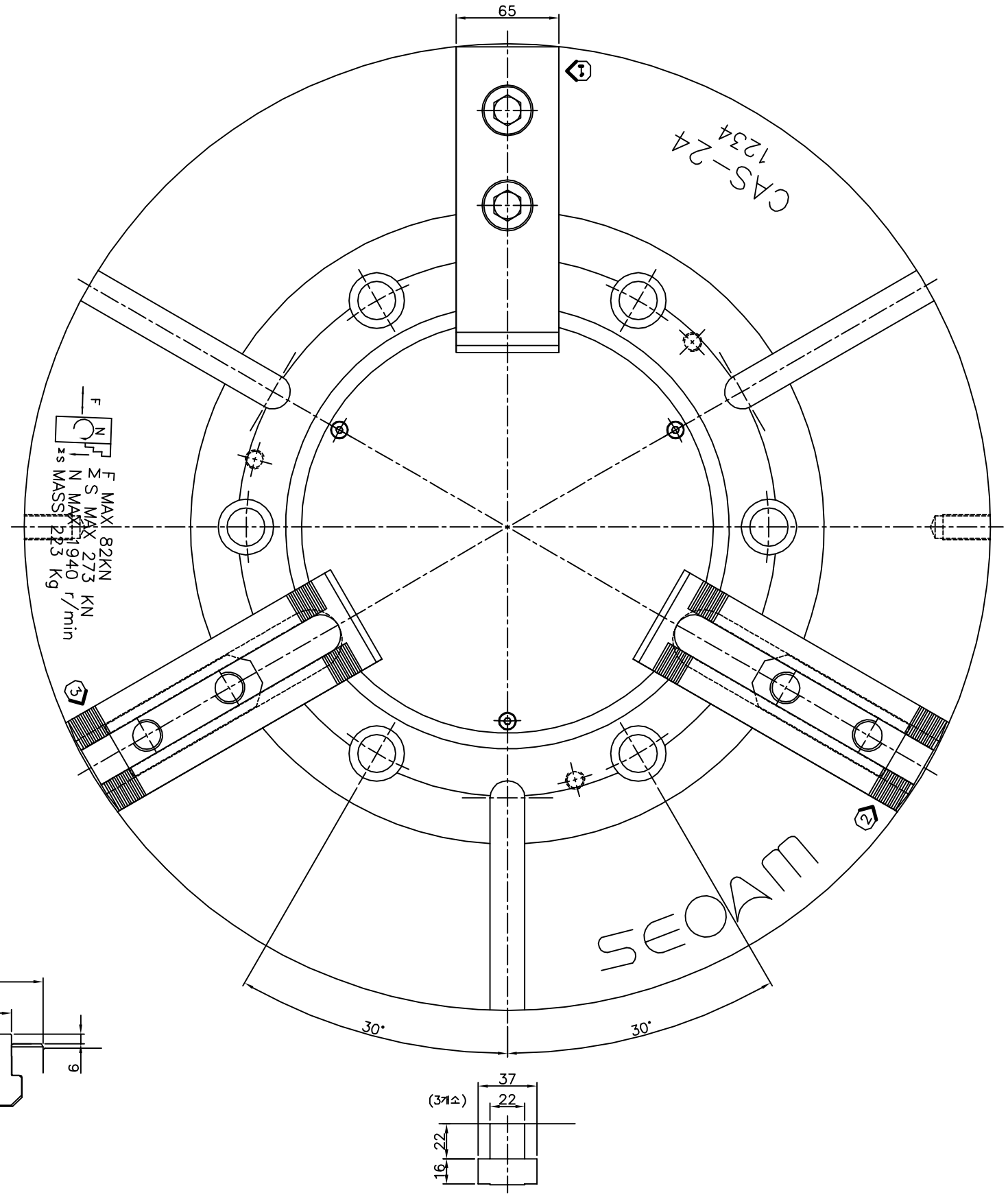

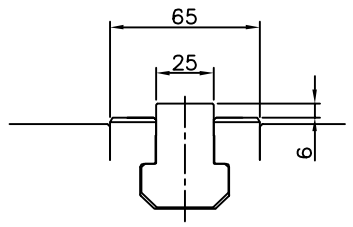

SPECIFICATIONS		
CHUCK TYPE	CASA-24K	
CYLINDER TYPE	YAS-200	
PISTON STROKE	35 mm	
JAW STROKE (DIA.)	MAX	16 mm
MAX. OPERATING PRESSURE (YAS-200)	MAX	32.6 kg/cm²
MAXIMUM DRAW BAR PULL	8362 kgf	
CLAMPING FORCE	27838 kgf	
MAX. R.P.M	1760 r.p.m	
WEIGHT	223 kg	
GD²	6.92 kg-m²	

SCALE	PROJECTION	ITEM NO.	CASA-24K
1:1		PART NAME	CLOSED CENTER CHUCK ASS'Y
SEOAM 서암기계공업주식회사 SEOAM MACHINERY INDUSTRY CO.,LTD.		PART NO.	1ASA24