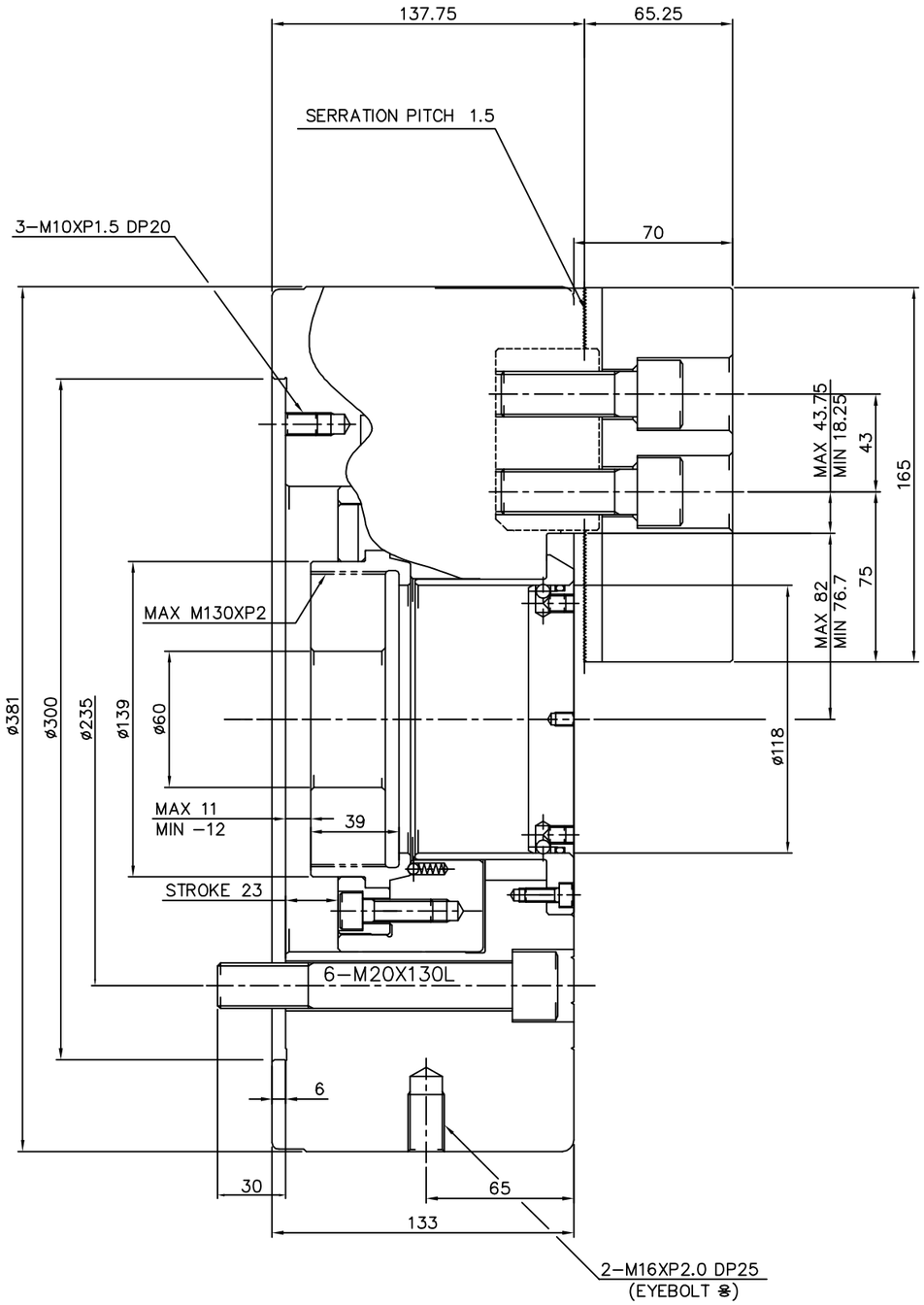

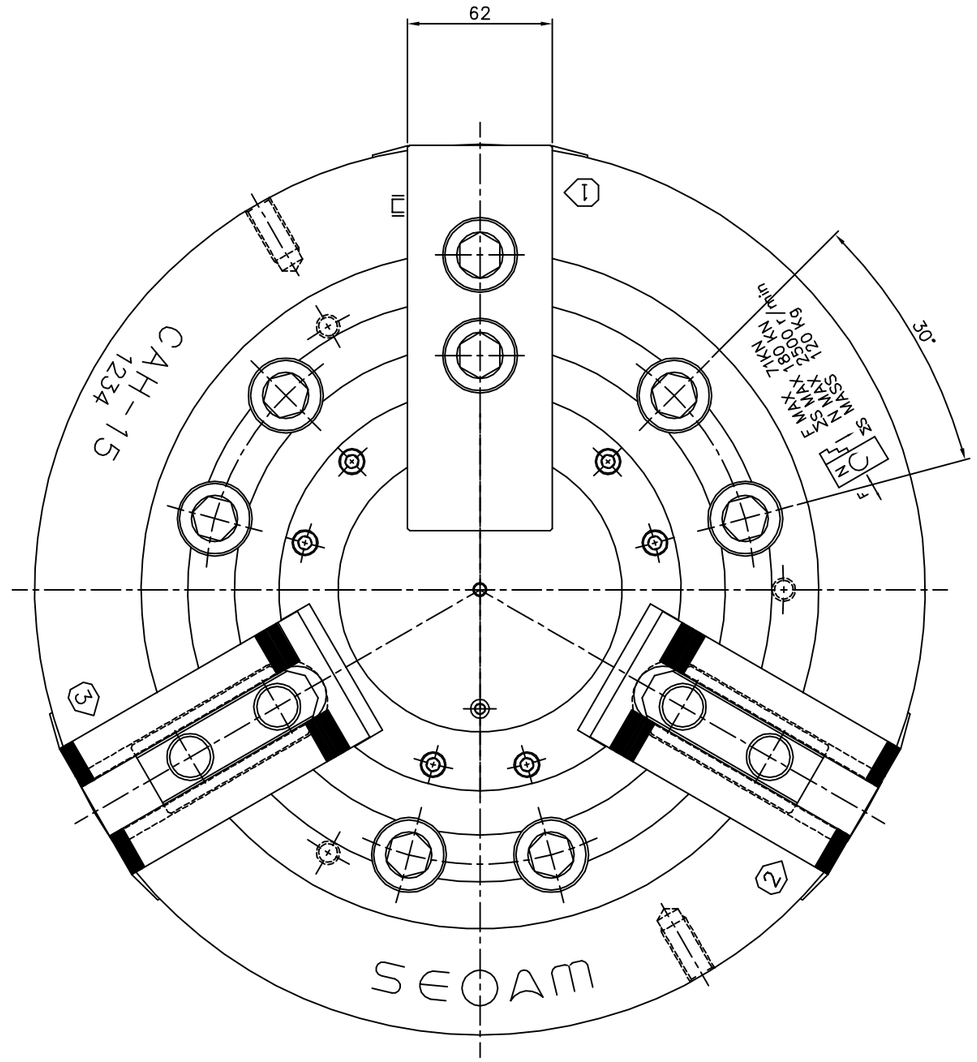

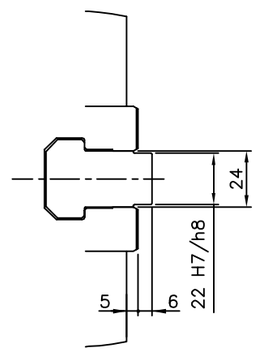

SPECIFICATIONS		
CHUCK TYPE		CAH-15
CYLINDER TYPE		YAH-15
PISTON STROKE		23 mm
JAW STROKE (DIA.)	MAX.	10.6 mm
	상용	mm
MAX. OPERATING PRESSURE	MAX.	23.5 Kgf/cm²
	상용	Kgf/cm²
MAX. DRAW BAR PULL		7,240 Kg.f
CLAMPING FORCE 실린더력 4,080일때		18,355 Kg.f
MAX R.P.M		2,500 r.p.m.
WEIGHT		120 Kg
GD²		9.09 Kg.m²

SCALE	PROJECTION	ITEM NO.	CAH-15
1:1		PART NAME	OPEN CENTER POWER CHCUK ASS'Y
SEOAM 서암기계공업주식회사 SEOAM MACHINERY INDUSTRY CO.,LTD.		PART NO.	1AH15